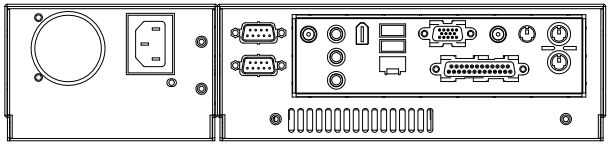

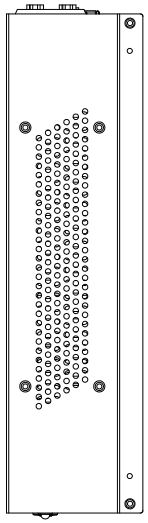

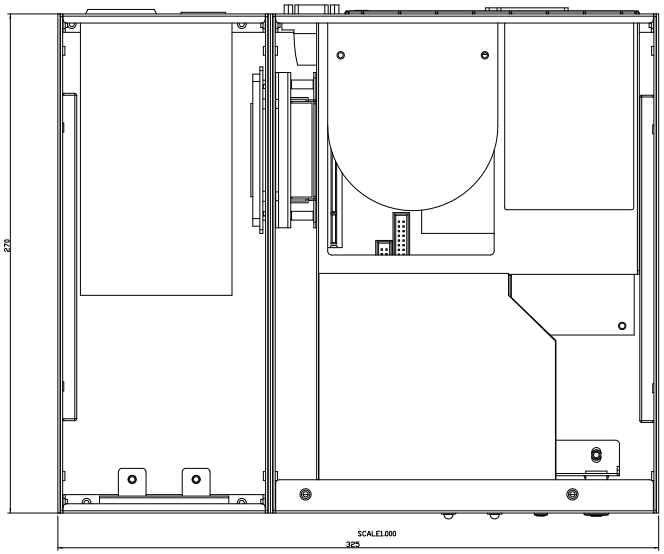

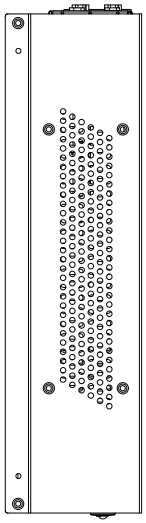

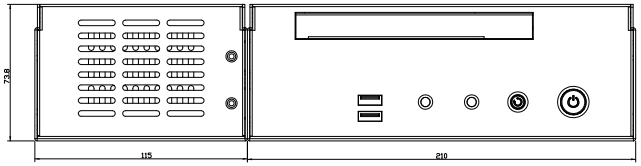

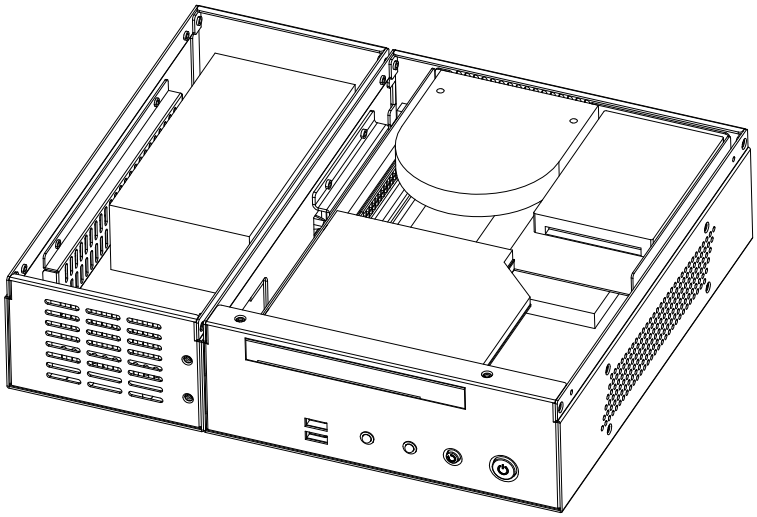

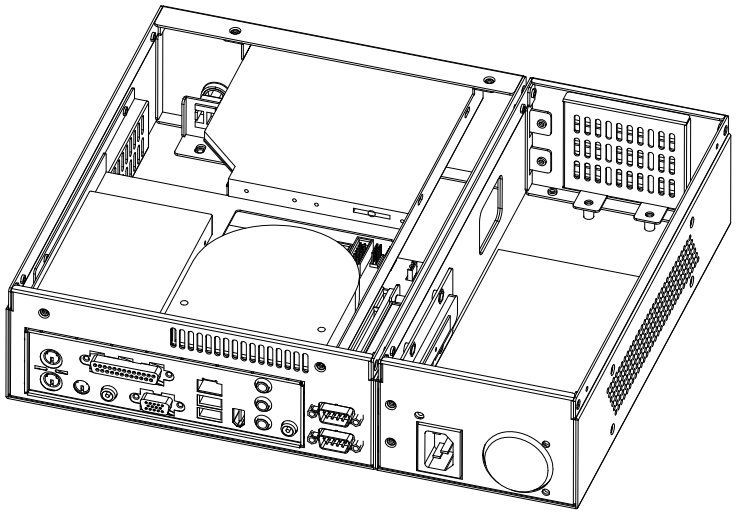

NOTE:
1> MATERIAL:
2> ALL BURRS MUST BE FILLETED 0.5mm
3> FINISH: COATING COLOR SEE SAMPLE
4> TOLERANCE: UNLESS OTHER WISE SPEC
SEE TOLERANCE TABLE

TOL	6 < 30 :	±0.1	UNIT : mm	FINISHING		PART NO:		Ver	
	30 < 120 :	±0.15	3D ANGLE'S	MATERIAL		MODEL NO: MPC-2000		Q'ty	1
	120 < 315 :	±0.2		APPROVED		TITLE	MPC-2000-303V		
	315 < :	±0.3		CHECKED					
	ANGLE TOL:	±0.5°		DESIGNED		DRAWING NO:			
				DRAWN	JAMES 040515	SIZE A0	SCALE /	SHEET:	OF

MARK	DESCRIPTION	SING	DATE
△			
△			
△			